ANL SERIES

DIMENSIONS

Unless otherwise specified, a tolerance of ±0.4mm applies to all dimensions.

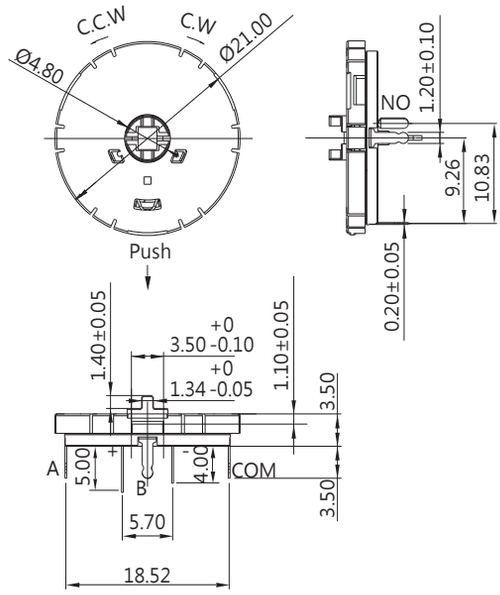

SPECIFICATIONS

Operating Force

Rotation – Max. 50gf-cm

Push - 220 ± 40 gf

Contact Resistance (initial)

Max. 300mΩ

Measured by ohm meter –Open Voltage<1VDC, Driver current -100mA

Insulation Resistance (at 100VDC/minute)

Min. 100MΩ

Operating Temperature Range

0°C to 40°C (with no icing)

Vibration

10~55 Hz, displacement 0.75 mm (p-p)

Electrical Service Life

Rotation – Min. 200,000 operations

C.W. 100,000 & C.C.W 100,000operations

Push – Min. 1,000,000 operations

Electrical Operating Frequency

Rotation – 30 operations per minute

Push – 120 operations per minute

CONTACT CONFIGURATION

PUSH

Rotation

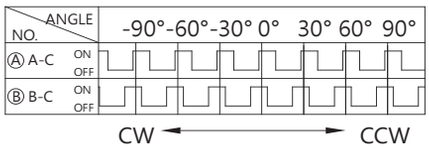

NUMBERS OF DETENT : 24

PULSE/ROTATION : 12 PULSE/360°

RATING

1mA 10VDC

APPLICATIONS

Remote control, Tablet, Keyboard, Audio, Mp3 player, Notebook, Mobile phone, Mobility TV, Home appliances

MOUNTING HOLES

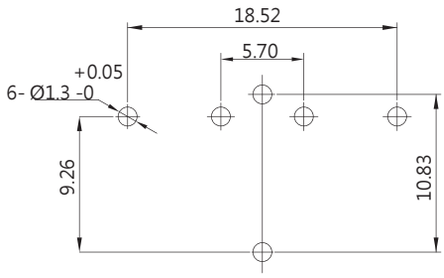

ORDERING INFORMATION

A N L — P 1 S — 2 S P B — Z

SERIES PREFIX
ANL

CODE	RATING CURRENT
P1	1mA 10VDC

CODE	OPERATING FORCE
S	Rotation Max.50gf-cm

CODE	TYPE
2	COVER IS NOT THROUGH Rotation Life :200,000 operations (C.W. 100,000 & C.C.W 100,000operations)

CODE	OPERATING TORQUE
S	Push 220 ± 40gf

CODE	TERMINAL TYPE
P	PCB TERMINAL

CODE	LED COLOR
B	BULE
W	WHITE
R	RED
G	GREEN

ROHS CODE
Z